Advances in Aircraft and Spacecraft Science, *Vol. 3, No. 2 (2016) 225-242*
DOI: http://dx.doi.org/10.12989/aas.2016.3.2.225

Mechanical architecture and loads definition for the design and testing of the Euclid spacecraft

Adriano Calvi*[1] and Patrizia Bastia[2a]

[1]*European Space Agency, Keplerlaan 1, PO Box 299, 2200 AG Noordwijk, The Netherlands*
[2]*Thales Alenia Space Italy, Strada Antica di Collegno 253, 10143 Torino, Italy*

(Received September 18, 2015, Revised November 14, 2015, Accepted November 28, 2015)

Abstract. Euclid is an astronomy and astrophysics space mission of the European Space Agency. The mission aims to understand why the expansion of the Universe is accelerating and what is the nature of the source responsible for this acceleration which physicists refer to as dark energy. This paper provides both an overview of the spacecraft mechanical architecture and a synthesis of the process applied to establish adequate mechanical loads for design and testing. Basic methodologies and procedures, logics and criteria which have been used with the target to meet a compliant, "optimised" design are illustrated. The strategy implemented to limit the risk for overdesign and over-testing without jeopardizing the design margins is also addressed.

Keywords: design loads; loads analysis; structural dynamics; Euclid spacecraft

1. Introduction

The launch phase of a space mission generally generates the highest mechanical loads for the spacecraft structures. Predicting appropriate loads is one of the most challenging aspects of spacecraft design. In particular calculating accurate dynamic responses is important not only to assess the structure ability to survive but also to provide design and test environments and requirements for units and subsystems.

This paper provides both an overview of the spacecraft mechanical architecture and a synthesis of the process applied to establish adequate mechanical loads for design and testing. Basic methodologies and procedures, logics and criteria which have been used with the target to meet a compliant, "optimized" design are illustrated. The strategy implemented to limit the risk for overdesign and over-testing without jeopardizing the design margins is also depicted. On-orbit loads (e.g., thermo-elastic loads) are not addressed.

This paper reports the status of the mechanical architecture and loads analysis at the Preliminary Design Review (PDR) of the spacecraft, July 2015.

*Corresponding author, Euclid Mechanical, Thermal and Propulsion Systems Engineer, Ph.D.,
E-mail: Adriano.Calvi@esa.int
[a]Euclid Mechanical System Engineer, E-mail: Patrizia.Bastia@thalesaleniaspace.com

Copyright © 2016 Techno-Press, Ltd.
http://www.techno-press.org/?journal=aas&subpage=7 ISSN: 2287-528X (Print), 2287-5271 (Online)

2. The Euclid mission

Euclid (Racca *et al*. 2014) is an astronomy and astrophysics space mission of the European Space Agency (ESA). The objective is to elucidate the geometry and the nature of dark energy and dark matter, essential but mysterious components of current "standard model of cosmology". The mission aims to understand why the expansion of the Universe is accelerating and what is the nature of the source responsible for this acceleration which physicists refer to as dark energy. Euclid will explore how the Universe evolved over the past 10 billion years to address questions related to fundamental physics and cosmology on the nature and properties of dark energy, dark matter and gravity, as well as on the physics of the early universe and the initial conditions which seeded the formation of cosmic structure.

To accomplish the Euclid mission, ESA has selected Thales Alenia Space Italy (TASI) as Prime Contractor for the implementation phase (i.e., design, development, manufacturing, integration and testing) of the spacecraft and its Service Module, Airbus Defence and Space (ADS) France for the Payload Module and the "Euclid Consortium" as the single team having the scientific responsibility of the mission including the scientific instruments.

Euclid will be equipped with a 1.2m Korsch telescope designed for a large field of view, feeding two instruments, VIS, a high quality visible imager, and NISP, a near infrared spectro-photometer.

The satellite will be launched by a Soyuz ST-B launcher from ESA's spaceport in Kourou and then travel to the L2 Sun-Earth Lagrangian point for a 6 years mission. The launch is planned for 2020.

3. The spacecraft mechanical architecture

The Euclid spacecraft mechanical architecture (Fig. 1) comprises the Payload Module (PLM) and the Service Module (SVM) connected by an interface structure designed to maximize thermal and mechanical decoupling. This interface consists of a quasi-isostatic mounting composed by three equally spaced bipods.

The SVM platform supports the sunshield/solar array (SSH) subsystem. The sunshield is mounted on the SVM platform by means of two rods interfacing with the top of platform itself and two brackets fixing the bottom of the sunshield structure.

3.1 Service module: configuration and mechanical design

The Service Module (Figs. 1 and 2) comprises the spacecraft subsystems supporting the payload operation, hosts the payload warm electronics, and provides structural interfaces to the PLM, the sunshield, and the launch vehicle. It is composed by:

- a platform, that is an irregular hexagonal-base prism built around a central cone that provides the interfaces with the launcher and with the PLM and encloses the propellant tanks;
- the sunshield, shielding the PLM from solar radiation and hosting the photovoltaic assembly (PVA) supplying electrical power to the spacecraft.

The SVM mechanical architecture is inherited from the Herschel satellite design, with a primary structure formed by the central thrust cone and eight shear panels. This structure brings the PLM loads directly to the launcher interface via an aluminium ring coupled with a PAS 1666

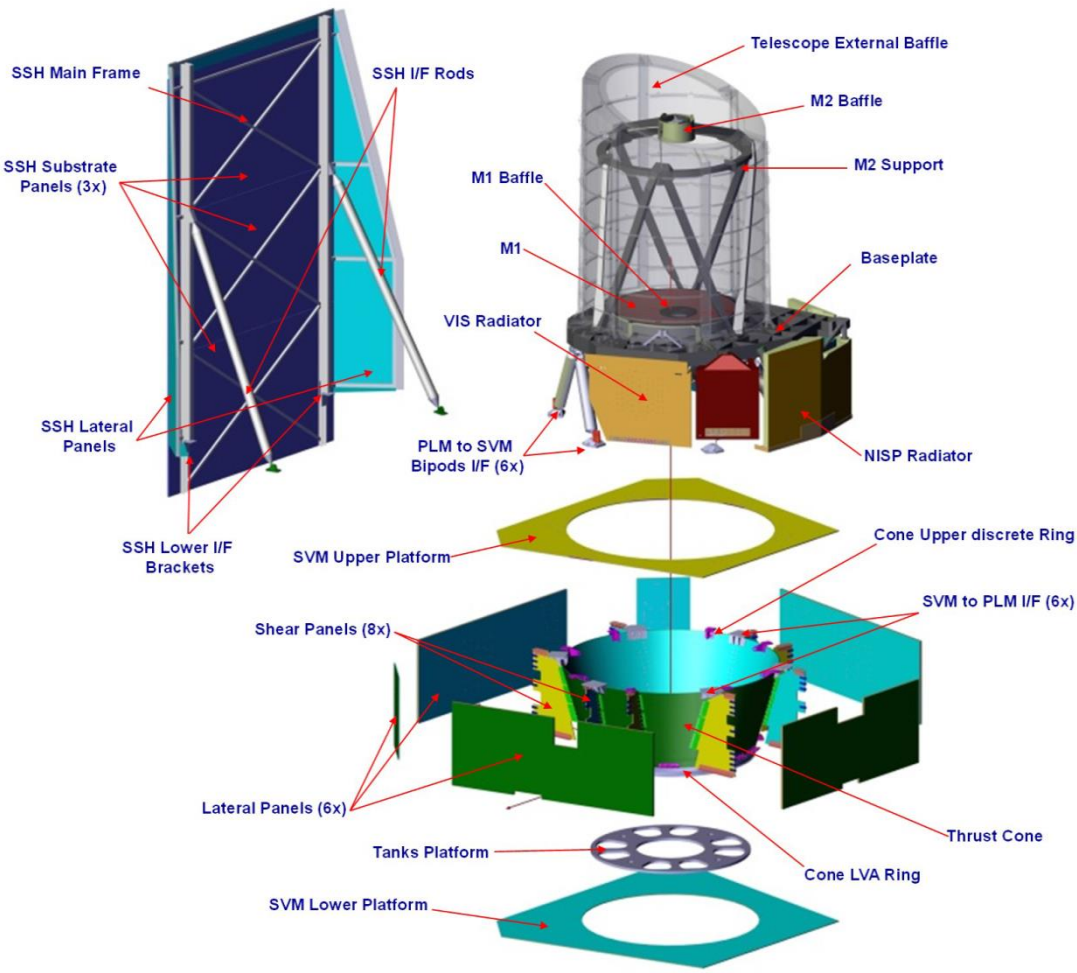

Fig. 1 Euclid mechanical architecture

MVS standard adapter (Soyuz User's Manual 2012).

The central thrust structure is connected to six lateral panels by means of the eight shear panels, whose location has been selected in order to cope with configuration constraints and structural needs. Upper and lower floors (improperly called "platforms"), connected to the shear panels as well, close the volume between the lateral panels and the central cone (Fig. 1). The internal part of the cone accommodates the four cold gas tanks of the Micro-propulsion System and the hydrazine tank of the Reaction Control System (Fig. 2).

The central thrust cone is closed at its bottom extremity by the "tanks platform", a lower central closure structure, supporting the propellant tanks and the propulsion hardware. The hydrazine tank is equatorial mounted on this platform via a dedicated flange, while the cold gas tanks, polar mounted, are fixed on one side on the same platform, and on the other side are mechanically linked to the cone via a set of dedicated carbon fibre reinforced plastic (CFRP) struts (Fig. 2) .

The lateral panels of the platform (Figs. 1 and 2) accommodate the subsystems equipment, grouped by function, and host the instruments warm electronics, which functionally belong to the

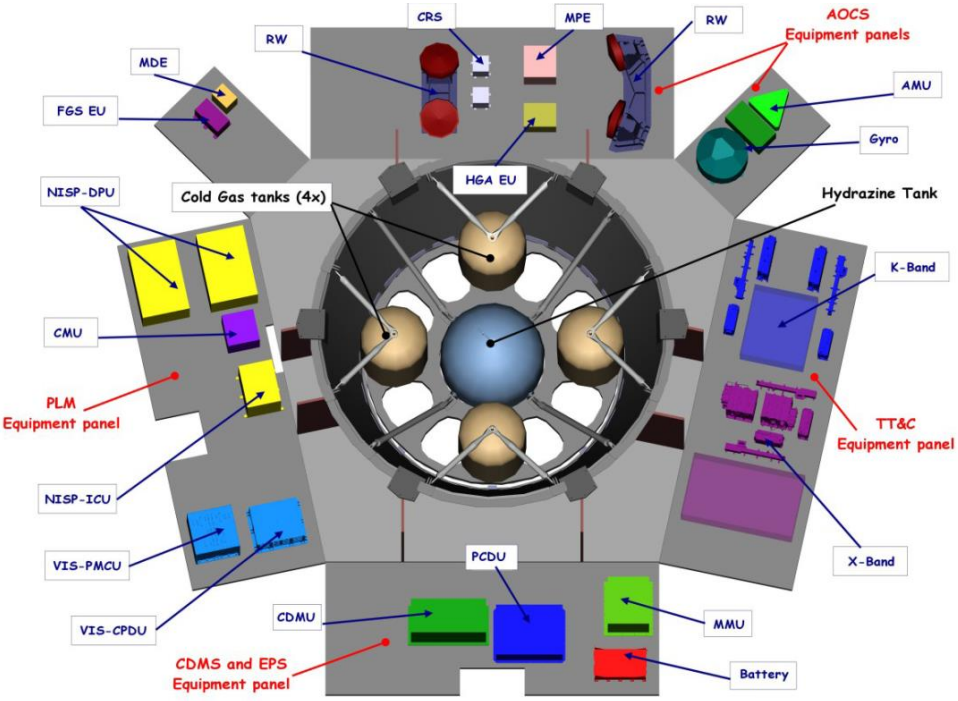

Fig. 2 SVM equipment accommodation-Internal view

PLM. The lateral panels of the platform also accommodate the radiators and the insulators for the thermal control of the internal equipment. Each lateral panel is dismountable to allow easy integration and test activities.

On the upper part of the central cone the traditional upper ring is replaced by a discrete brackets concept. Such brackets provide support to the PLM interfaces and to the gas tanks struts and transfer the loads from the components to the thrust structure. Both the PLM and SSH interfaces are placed in correspondence of shear panels/upper platform intersection to introduce the loads on very robust locations and to optimise the load path. Specifically the upper platform provides the interface to the PLM through 6 discrete brackets and the interface to the sunshield.

The material selection has been driven by the tight structural stability requirements therefore high stability materials have been selected. This has led to a large use of M55J fibre with cyanate-ester EX1515 resin. The SVM structures are mainly made of sandwich panels with aluminium honeycomb and CFRP skins, except for the lateral panels and the tanks support structure that are sandwich panels with aluminium skins. The struts connecting the tanks are in CFRP with aluminium end-fittings and the cone lower ring is in Al 7075.

The SSH structural design (Fig. 1) is based on the following main elements:

• the support structure (composed by poles, main struts, stiffeners, main brackets and wings);

• the substrate panels.

The support structure consists of a frame made out of CFRP wound profiles connected together by different types of joints. Its main function is to support the substrate panels and transfer the loads to the SVM. The main poles consist of wound CFRP profile with rectangular section. The struts are two identical wound CFRP profiles with circular section and titanium end fittings. The

two end fittings are connected to the poles and to the SVM platform through dedicated brackets. The SSH support structure structural tasks are completed by stiffeners distributed in a truss-like structure configuration. The wings (also called SSH lateral panels), two lightweight low loaded structures, attached to the external sides of the main poles, contribute to the thermal and optical shielding of the PLM by providing support for optical baffles and multi-layer insulation (MLI).

The substrate panels provide support for the PVA installation. They consist of three sandwich panels, with identical dimensions, with aluminium core and CFRP skins connected to the support structure by inserts whose design and locations are such to allow panels interchangeability.

3.2 Payload module: configuration and mechanical design

The Euclid PLM consists of a 1.2 m three-mirror Korsch type telescope (Fig. 1) and of two instruments, VIS and NISP, developed by the Euclid Consortium and delivered by ESA to the industrial Prime Contractor as “customer furnished items”.

The PLM provides mechanical and thermal interfaces, i.e., radiating areas and heating lines, to the instruments. It should be noted that whereas NISP is a stand-alone instrument with interface bipods, VIS is delivered in several separate parts (e.g., focal plane assembly, FPA, connected to proximity electronics, readout shutter unit, RSU, calibration unit), with dedicated mechanical and thermal interfaces with the PLM.

The PLM mechanical and thermal architectures aim at allowing independent development of the telescope and of the NISP and VIS instruments. It is organised around the silicon carbide (SiC) baseplate which supports on one side the telescope primary (M1) and secondary (M2) mirrors, and on other side the remaining optical elements and the two scientific instruments. This architecture implements as well a thermal architecture with two cavities both passively controlled at neighbouring temperatures, separated by the baseplate:

- the telescope cavity which includes the M1 and M2 mirrors as well as the M2 refocusing mechanism and the associated support structure. This cavity is thermally insulated by the external baffle;
- the instrument cavity (Fig. 3) including three telescope folding mirrors, the tertiary mirror, the dichroic, the fine guidance sensor (FGS) and the wave front sensor (WFS), the two instruments VIS and NISP, the shutter and the calibration source for the VIS channel. The lateral sides are equipped with the instrument radiators and a radiation shielding. The cavity is fully closed by MLI on the unoccupied lateral sides (i.e., located on spacecraft sunshield side) and also at the level of the SVM upper floor.

Both the telescope cavity and the instrument cavity are passively cooled below 135K, thanks to the high insulation from the SVM upper floor and sunshield and three large PLM radiators removing the instrument dissipated power. The PLM thermal concept manages three temperature levels with three radiators:

- VIS electronics radiator maintaining the proximity electronics interface between 270K and 280K;
- NISP detector radiator maintaining 95K interface temperature via thermal straps;
- baseplate and external baffle radiators maintaining VIS focal plane detectors and NISP opto-mechanical assembly and proximity electronics between 127K to 150K via conductive links and thermal straps.

The PLM insulation from the SVM is realized by low conductance struts and high efficiency MLI on both the SVM upper floor and the PLM bottom. High efficiency MLI on the SSH backside

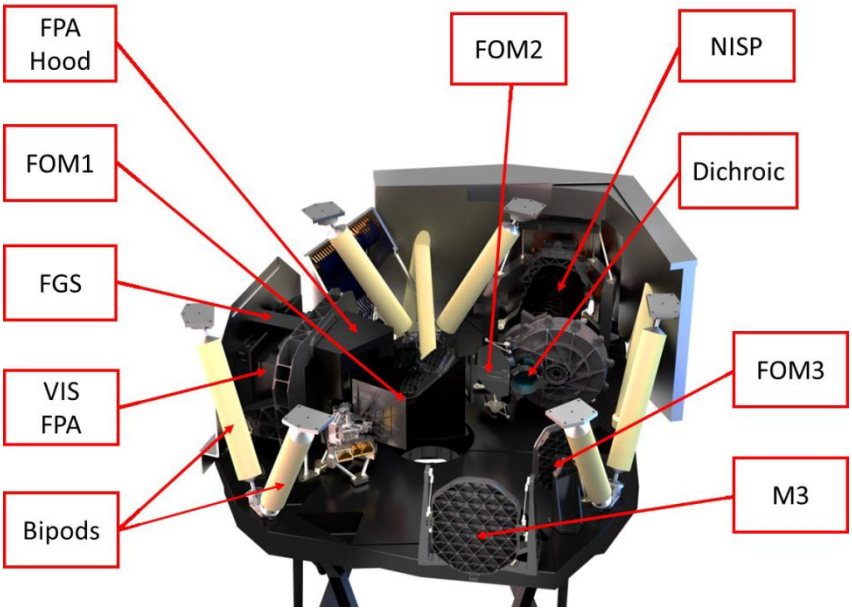

Fig. 3 Euclid PLM overview - Instruments cavity. Source: ADS France

provides maximum radiative thermal isolation of the PLM from the sunshield and solar array.

The primary structure of the PLM is composed by the large baseplate and by the set of bipods, providing the mechanical and thermal interfaces with the SVM upper floor.

The baseplate is large (2750 mm×2850 mm) and thick (150 mm) because of the strength requirements and accommodation constraints. It is made of 4 silicon carbide parts assembled by brazing. It features a light-weighted panel with the skin mainly on the instruments cavity side, and with large stiffeners on the opposite side. It is fitted with holes and bonded metallic pads to provide the necessary interfaces with all the elements to be integrated on it.

The pseudo isostatic interface to the spacecraft upper floor is ensured by the set of 3 identical bipods, each of them being composed of 2 struts. The stiffness of the struts is a compromise between the necessary stiffness to withstand the launch environment and the necessary mechanical and thermal decoupling for the in-orbit performances. The 3 bipods are equally spaced at 120° one from each other, interfacing the upper floor on a 2.25 m diameter circle. In order to achieve the required mechanical and thermal performances, each strut will be made of a glass fibre reinforced plastic (GFRP) tube equipped with titanium end-fitting on each side. The angle between each strut is of 60°. On the baseplate side, the two struts of each bipod interface with a single metallic bracket, itself bolted to the baseplate. On the SVM side, the six struts directly interface with the SVM thrust cone via titanium brackets.

The Euclid primary mirror M1 has an external mechanical diameter of 1.25 m (the optical aperture is 1.2 m) and is isostatically fixed to the baseplate. It is a monolithic silicon carbide part coated with a SiC chemical vapour deposition (CVD) layer.

The M2 supporting structure is a truss structure fixed on the baseplate at the M1 periphery. The truss structure is a silicon carbide structure composed of the “spider” (a barrel with 3 struts), supported by 6 monolithic bars. The M2, the M2 mechanism (M2M) assembly and the M2 baffle are mounted on top of the structure and the bars are interfacing with the baseplate though specific

brackets.

The telescope external baffle has two main functions:

• to reduce the straylight from bright sources outside the field of view, by limiting the sky area seen by the primary mirror;

• to provide large radiating areas for the PLM thermal control and an improved protection of the PLM from the sunshield. Flexible thermal straps provide a conductive path between the radiative areas on this baffle and the PLM baseplate.

The external baffle is mounted with six feet or bipods on the top of the baseplate. These interfaces aim at filtering the thermo-elastic distortions between the external baffle and the baseplate. The current design consists of a cylindrical baffle made of riveted aluminium sheets with dedicated reinforcements at structural location.

3.3 Launch configuration and mechanical interfaces

The launcher selected for the Euclid satellite is Soyuz ST-B. The launcher user's manual (Soyuz User's Manual 2012) provides requirements and details regarding the description of interfaces between the spacecraft and the launch vehicle.

The spacecraft is mated to the launcher through a dedicated adapter structure that provides mechanical interface, electrical harnesses routing and systems to assure the spacecraft separation. The PAS 1666 MVS standard adapter with separation interface diameter of 1666 mm has been selected. The spacecraft is secured to the adapter interface frame by a clamping device. The clamp-band consists of a band with one connecting point. The tension applied to the band provides pressure on the clamp which attaches the satellite to the launcher. Release is obtained by means of a Clamp Band Opening Device (CBOD), pyrotechnically initiated. The CBOD is specially designed to generate low shock levels. A set of catchers secures a safe behaviour and parks the clamp band on the adapter.

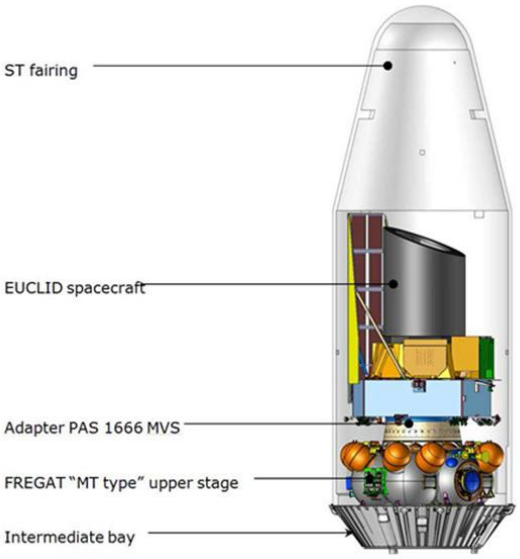

Fig. 4 Configuration of the launch vehicle upper part for Soyuz ST-B / Euclid project

The payload fairing protects the spacecraft from external environment during the flight as well as on the ground, providing at the same time specific access to the spacecraft during ground operations. The Fig. 4 shows the baseline launcher interface configuration.

4. Mechanical environments induced by the launcher

The Launcher Authority specifies in (Soyuz User's Manual 2012) the environmental conditions and requirements which have to be considered for the design and the verification process of the spacecraft.

In particular the launcher mechanical environments having the largest relevance on the spacecraft mechanical loads and consequently influencing the design, dimensioning and test verification process of Euclid are hereafter briefly recalled:

- Quasi-static loads (QSL), specified in terms of limit load factors at the centre of gravity (CoG) of the spacecraft (Fig. 5).
- Sinusoidal and transient excitations specified in terms of sine-equivalent vibrations at spacecraft-to-adapter interface (Fig. 6) in longitudinal and lateral directions.
- Acoustic pressure fluctuations under the fairing (mainly due to lift-off and transonic phase) specified in terms of acoustic noise spectrum (Table 1). It should be noted that the acoustic levels specified for Euclid have been updated with respect to the ones reported in (Soyuz User's Manual 2012).
- Shock loads, due to the clamp band separation system, specified in terms of shock response spectra (SRS) at spacecraft base (Table 2). These levels are applied simultaneously in axial and radial directions.

It should be noted that the launcher user's manual (Soyuz User's Manual 2012) also specifies a random vibration environment at the base of the spacecraft in terms of accelerations power spectral density (PSD) acting simultaneously along each of the three reference axes. Random vibrations at the spacecraft base are generated by propulsion system operation and by the adjacent structures vibro-acoustic response.

According to (Soyuz User's Manual 2012) both environments, i.e., the random vibration at the spacecraft base and the acoustic noise under the fairing, have to be considered for the definition of vibro-acoustic loads. In particular, the verification of the spacecraft compliance with the random vibration environment at the base in the 20-100 Hz frequency range has to be specifically performed while spacecraft qualification with respect to the random vibration environment above 100 Hz may be obtained through the acoustic vibration test.

Relevant mechanical analyses of the spacecraft showed that the application of the specified random vibration environment at the base of spacecraft induces high responses and loads throughout the spacecraft. In practice that environment is potentially driving the design of some spacecraft parts and units. In particular it has been demonstrated (Bellini and Calvi 2014) that from 30 Hz to 100 Hz the random input is generally more severe than the sine input in most of the relevant spacecraft locations, especially in the service module. Likewise, in the same frequency range, the dynamic responses due to random vibration environment at spacecraft base are generally higher than those induced by the acoustic loads (Bellini and Calvi 2014).

With the aim of avoiding any overdesign, the approach was to perform a spacecraft base-drive random vibration analysis mainly finalized to the definition of a "notched PSD spectrum" such that it does not drive the mechanical loads. The two key aspects were:

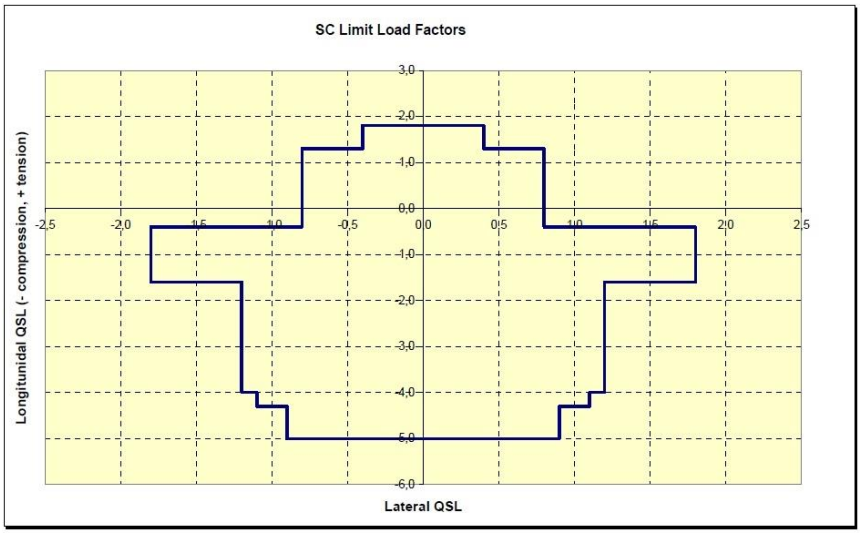

Fig. 5 Spacecraft limit load factors (Soyuz User's Manual 2012)

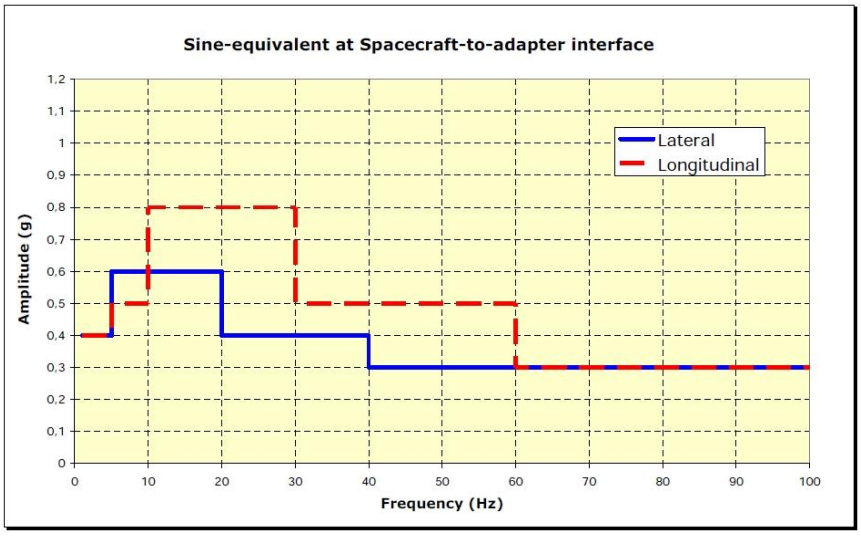

Fig. 6 Sine-equivalent vibrations at spacecraft-to-adapter interface, flight level (Soyuz User's Manual 2012)

Table 1 Acoustic noise spectrum under the fairing, flight level

Octave Band Center Frequency (Hz)							OASPL (dB)
31.5	63	125	250	500	1000	2000	
Acoustic Levels (dB)							
128	131.5	132.5	139.5	133.5	126.5	120.5	141.9

• to make sure that none of the Euclid spacecraft equipment exceeds the design loads defined by considering the sine and the acoustic environments
• the relaxation of the environmental requirement at the base of the spacecraft was acceptable to

Table 2 Soyuz SRS for off-the-shelf clamp band separation systems, flight level (Soyuz User's Manual 2012)

Spacecraft Adapter Interface Diameter	Frequency (Hz)	
	100-1000	1000-10000
	SRS, Shock Response Spectra (Q=10) (g)	
Ø 937, Ø 1194, Ø 1666	20-1000	1000-700

the Launcher Authority.

More details are reported in (Bellini and Calvi 2014).

5. Dynamic analyses and loads definition

The definition of the loads and mechanical environments is one of the most challenging activities of the spacecraft design. For Euclid the rather traditional approach of "flowing-down" the loads and environments from the ones specified by the launcher user's manual to "lower level of assembly", e.g., payload module, instruments and units, has been applied.

The initial key aspects of the approach are the preparation of adequate mathematical models of the spacecraft, the execution of dynamic analyses at "spacecraft system" level applying as input the mechanical environments induced by the launcher and the recovery of the relevant responses.

The definition of equipment and units load factors have been defined by enveloping the quasi-static loads derived from the sine vibration analysis and from the vibro-acoustic analysis. No combination of the two load sources has been performed since the mentioned environments cover different launch events, with different timing (ECSS-E-HB-32-26A).

The status of the loads analysis which is here after reported is at the Preliminary Design Review of the spacecraft, July 2015. It should be noted that the overall "loads analysis cycles" (ECSS-E-HB-32-26A) are normally repeated at different phases of the project with mathematical models in line with the maturity of the project.

5.1 Euclid finite element model

The Euclid finite element model (FEM) for the structural analysis (Fig. 7) has been developed by using the NASTRAN finite element code. It has been prepared by merging the PLM FEM and the SVM FEM developed respectively by ADS and by TASI on the basis of the design solutions established by ADS-CASA Espacio, which is responsible for the structure of the SVM platform.

The spacecraft has been mainly modelled with "SHELL", "BAR" and "BEAM" elements. The equipment masses have been simulated by means of "CONM2" lumped masses. Nonstructural masses have been included in some properties cards. In order to properly simulate the dynamic behaviour and coupling effects, the mass distribution includes the relevant maturity margins but does not include the system mass margins. The total mass for dynamic analyses was 1832 kg.

The structural interfaces have been idealized with "RBE2" and "RBE3" rigid elements or by using "CELAS2" or "CBUSH" spring elements. The material cards used have been: "MAT1" (isotropic), "MAT2" (anisotropic) and "MAT8" (orthotropic) in conjunction with "PCOMP" properties to simulate composite material adopted in some main items.

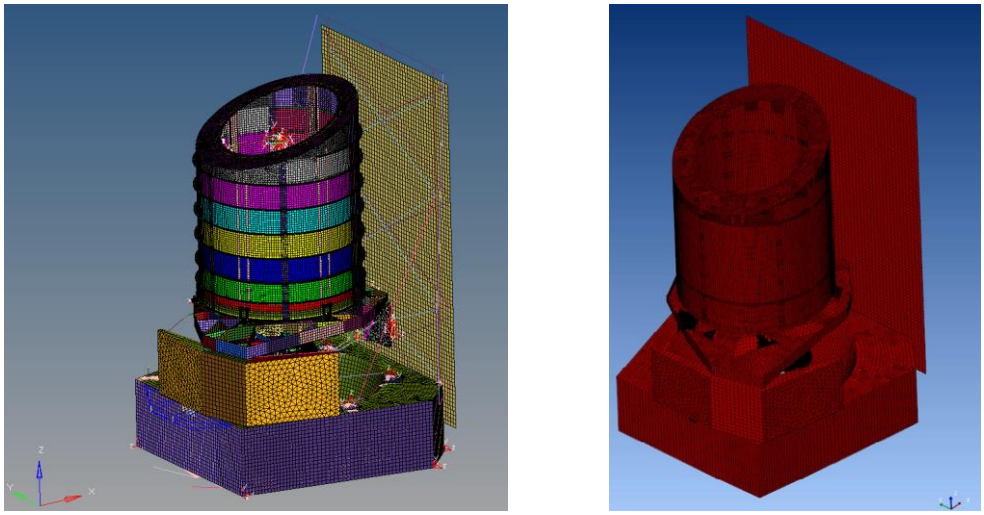

Fig. 7 Euclid spacecraft FEM - General view (left) and surfaces loaded by acoustic diffuse field (right)

5.2 Frequency response analysis

The main objective of the base-drive frequency response analysis of the spacecraft is usually to predict the dynamic response to the launcher sine environment. The recovered data are used to support the definition of sine vibration specifications at lower levels of assembly as well as to support the definition of the load factors, by calculating the equivalent accelerations at CoG (also called quasi-static loads, QSL (ECSS-E-HB-32-26A)).

For this analysis the NASTRAN SOL 111, i.e., the modal frequency response solution sequence, has been used. Three separate load cases have been considered, each one corresponding to a reference direction, according to the specified mechanical environment.

The range of excitation has been limited to 100 Hz, however the dynamic response of the structure up to 200 Hz was taken into account.

The preliminary modal analysis has shown two fundamental lateral modes at 17.7 Hz and 18.3 Hz in *X* and *Y* direction respectively. The first significant axial mode is at 44.15 Hz.

The nominal sine input (Fig. 6) has been notched in line with “primary notching” criteria (ECSS-E-HB-32-26A). In practice a limitation of the interface forces and moments at spacecraft interface has been considered consistently with the limit load factors specified by the launcher user’s manual, i.e., 5 g in longitudinal direction and 1.8 g in lateral direction (Fig. 5). On the basis of the results obtained, the reduction of the input is needed in the lateral directions but it is not needed in the longitudinal direction.

In order to take into account the effect of the very low damping associated with SiC material, a dedicated procedure has been set up to assign specific damping values to the parts made of SiC. In this way the analysis has been performed with damping values equivalent to an amplification factors Q=50 for all SiC parts and Q=25 elsewhere, which corresponds to the damping normally attributed to the metallic and composite material parts.

For the components modelled as dedicated flexible FEMs, both accelerations and forces have been recovered at the interfaces with the support structure. The former ones have been used to define the sine qualification specifications and the latter ones to derive the equivalent accelerations

at CoG. For equipment and units, modelled as lumped masses rigidly connected to the support structure, the accelerations have been recovered for the nodes of the lumped masses. In this case the same output has been used to define both sine specifications spectra and CoG accelerations, since it is assumed that the unit behaves rigidly in the whole analysed frequency range.

5.3 Vibro-acoustic analysis

The main objective of the vibro-acoustic analysis of the spacecraft is usually to predict the dynamic response to the launcher acoustic noise environment. The recovered data are used to support the definition of random vibration specifications at lower levels of assembly as well as to support the definition of the load factors, by calculating the equivalent accelerations at CoG.

A finite elements vibro-acoustic analysis has been performed by using the software code ACTRAN, in the frequency range up to 355 Hz (upper bound of 250 Hz centered octave band). The selection of the frequency cut-off was mainly driven by the limitation of the computational resources, since this kind of analysis is very demanding.

The analysis has been performed by applying the specified acoustic sound pressure diffuse field (Table 1) to all spacecraft exposed surfaces (Fig. 7).

The modal damping model chosen for the vibro-acoustic analysis was a frequency dependent modal damping, i.e., $Q = \sqrt{f}$, where Q is the amplification factor and f the frequency. For lower frequencies octave bands the amplification factor has been kept equal to 10 to avoid excessive damping. The choice of a frequency dependent damping is justified by past experiences, i.e., based on dynamic responses of similar structures.

In order to take into account the effect of the very low damping associated with SiC material, i.e., to account for the expected larger dynamic response, a specific additional safety factor has been applied to the output relevant to SiC parts. The values of the mentioned factor have been computed according to a dedicated procedure and have been applied to equipment and units on a case by case basis.

5.4 Shock analysis

The main objective of the spacecraft shock analysis is to predict the dynamic response to the applicable shock environments. The recovered data are used to support the definition of shock specifications at lower levels of assembly.

The shock specification applicable to the Euclid spacecraft is reported in Table 2 in terms of SRS (with $Q = 10$) and refers to the flight event of spacecraft separation. The shock source is the clamp-band separation system. These levels are applied simultaneously in axial and radial directions.

In order to predict and estimate the shock response at various spacecraft locations, two relevant methods reported in (ESSB-HB-E-005) have been applied.

TASI usually computes the shock attenuation from the source to the desired location using the “point source” attenuation method, as it allows to consider the effect of mechanical discontinuities (i.e., junctions). However, in the frame of the Euclid project, also the specific methodology to evaluate the attenuation of the shock wave generated by a clamp-band has been applied (ESSB-HB-E-005). It should be noted that the clamp-band methodology does not consider the presence of junctions to compute the shock environment at the desired location, but only the distance between shock source and target as unique parameter.

The Euclid shock analysis has shown that the clamp-band attenuation approach is generally less conservative than the point source one. At spacecraft PDR the shock specifications were generally established as the envelope of the results of the two approaches, however to avoid excessive conservatism, the results of the clamp-band attenuation approach were applied for some units.

5.5 Launcher-spacecraft coupled loads analysis

The main objective of the launcher-spacecraft coupled loads analysis (CLA) is usually to predict the dynamic response caused by the launch transients. Normally the goal is to produce a bounding set of loads for design or verification. In practice the CLA results support the definition of the "flight limit loads" for the spacecraft and may be considered as an "indicator of compliance" between the overall environment specified by the launcher at the interface with the spacecraft and the strength of the spacecraft structure (ECSS-E-HB-32-26A).

A preliminary Soyuz ST-B / Euclid spacecraft coupled loads analysis has been performed within the activities for the preparation of the spacecraft PDR. The analysis simulated a mission in a single launch configuration, implementing the Euclid spacecraft integrated on a PAS 1666 MVS adapter and mated on the Fregat upper stage.

The coupled loads analysis has been performed by the Launcher Authority, by merging the spacecraft mathematical model (in Craig-Bampton format) provided by TAS-I to the launcher mathematical models.

The CLA results provided information and data about loading and mechanical environment generated on the spacecraft during 9 flight load cases.

An assessment has been performed on the CLA results in terms of sine equivalent vibration level at spacecraft/adapter interface, quasi static loads at spacecraft center of gravity and relative fluxes. QSLs and accelerations internal to the spacecraft have been also compared with the relevant design or qualification loads for the main items (PLM, VIS and NISP) and units. The following conclusions have been reached:

- the results of the CLA show that all the sine equivalent vibration levels, spacecraft QSLs and relevant flux values calculated at the Euclid interface, are in compliance with the Soyuz user's manual environmental specifications and dimensioning load cases. In conclusion, at spacecraft level, the Soyuz user's manual is thus confirmed as fully applicable to the Euclid project.
- Comparing the "internal" QSLs and accelerations, and applying the relevant safety factors, the CLA results are generally enveloped by the design/qualification loads, with very few exceptions. This provides evidence that conservative loads have been specified for the spacecraft in the low frequency range.

The Fig. 8 reports the equivalent sine vibrations levels at the spacecraft/adapter interface for the longitudinal axis: a substantial margin is shown.

6. Loads and factors of safety

The Euclid project applies the standard documents by the European Cooperation for Space Standardization (ECSS) and, in particular, the logic for factors of safety reported in (ECSS-E-ST-32-10C), as in Fig. 9. The key aspects are here after briefly recalled.

The design limit loads DLL are calculated by multiplying the (flight) limit loads LL by the Coefficient A, i.e., the design factor, as in the following relationship

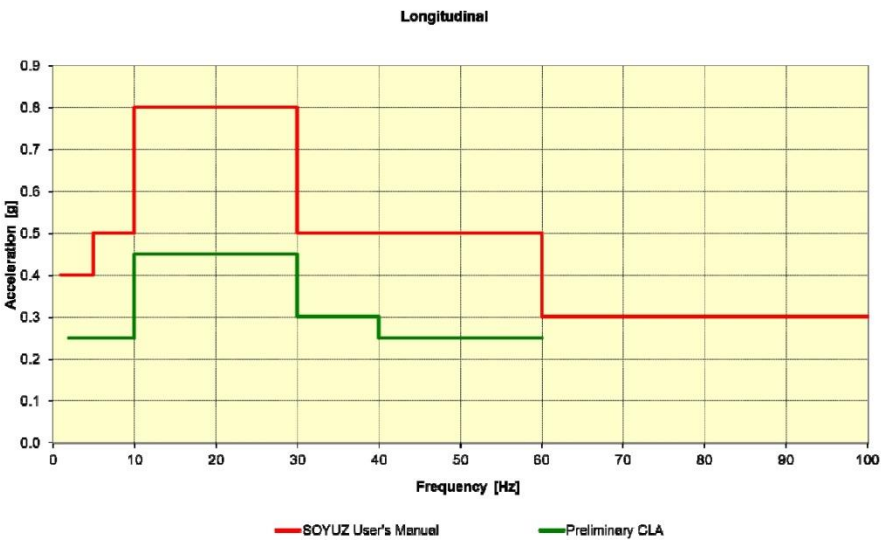

Fig. 8 Flight sine vibrations levels at the spacecraft/adapter interface (longitudinal axis). Source: Arianespace

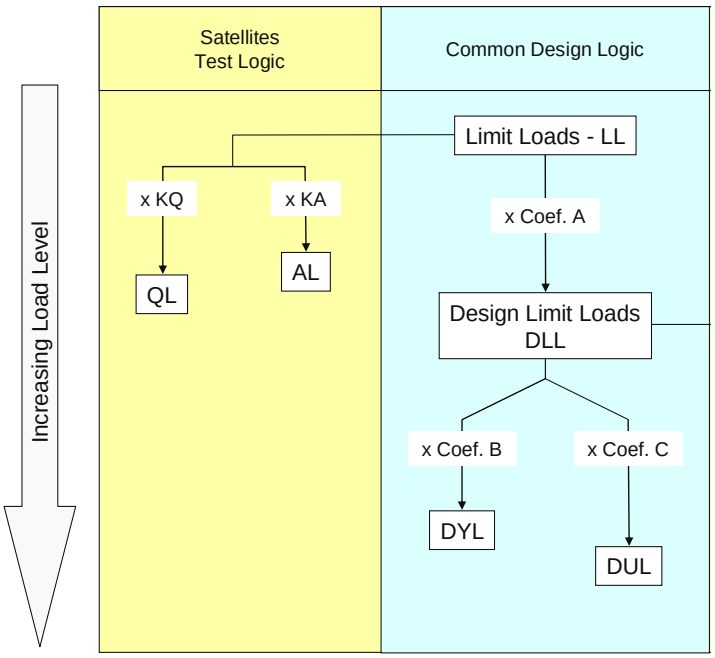

Fig. 9 Logic for factors of safety application (ECSS-E-ST-32-10C)

$$DLL = KQ \times KP \times KM \times LL \tag{1}$$

Where KQ is the qualification factor, imposed by the Launcher Authority, for Soyuz $KQ = 1.3$; KP is the "project factor" and KM the "model factor".

The model factor is applied to account for uncertainties in mathematical models when predicting dynamic response, loads and evaluating load paths. While going through the design refinement loops, the model factor can be progressively reduced to 1.0 after demonstration of satisfactory correlation between mathematical models and test measurements.

The "project factor" is applied to account for the maturity of the program (e.g., stability of the mass budget, well identified design) and the confidence in the specifications given to the project. This factor integrates a programmatic margin e.g., for growth potential for further developments. The value of KP is generally defined at system level and can be reduced during the development.

The test loads are calculated by multiplying the limit loads LL by the relevant test factors, i.e., the qualification factor KQ for qualification loads or the acceptance factor KA for acceptance loads.

It should be noted that the design factor includes the qualification factor for the definition of the design loads. This is consistent with the verification plan of the Euclid spacecraft, in fact the flight hardware will be tested at qualification load levels.

The project and model factors ensure that the sizing of the structure is performed for higher loads than the qualification loads by covering the relevant uncertainties: the two factors then act as a risk mitigation in the mechanical development process. On the other hand if the KP and KM values selected are too conservative, they can produce an inefficient structural design with unnecessary mass penalty or even an unfeasible design. For this reason great attention has been paid in defining the KP and KM values, also considering a zoning approach, in line with the maturity of the mathematical models and the maturity of the project.

7. Strategy to avoid overdesign and overtesting

The mechanical design drivers of the Euclid PLM and scientific instruments are related to the mass, the stiffness (i.e., the natural frequencies of the fundamental modes) and the dimensional stability. For this reason the main parts of the PLM and instruments are made of silicon carbide.

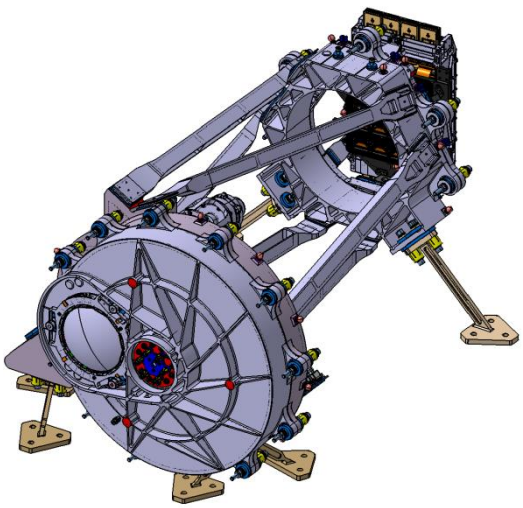

Fig. 10 The NISP opto-mechanical and detector assembly (NI-OMADA)

This ceramic material was selected for its excellent stiffness to mass ratio and for its very low coefficient of thermal expansion (CTE). It can be used for structural components as well as for mirrors since it can be polished and coated.

Furthermore the PLM and instruments include kinematic mounts which ensure a decoupling of the thermoelastic and mounting distortions. They constitute relatively simple interfaces to the baseplate with well identified load transfer paths. For example in Fig. 10 the opto-mechanical and detector assembly (NI-OMADA) of the NISP instrument is shown.

Despite a relatively high strength, the SiC is brittle and over stressing should thus be avoided with much more care than with metallic materials, for which local overstress often results into local yielding but not into a complete failure. Another point of attention is the alignment stability: the interfaces to SiC are bolted, relying on friction to transfer the loads. Since the instruments have stringent alignment stability requirements, overloading of the bolted assemblies should be avoided. Moreover the SiC has a very low intrinsic damping. Amplification at resonances greater than 100 were recorded during relevant vibration tests (Salvignol *et al*. 2009).

As a consequence, the mechanical load specifications should be as low as possible due to the fragile components the PLM and instruments include. This is important at any level of mechanical specifications, considering the "flow-down approach" used to define loads and environments at lower level of assembly.

A "notching strategy" (ECSS-E-HB-32-26A) is then crucial to properly define the design loads to avoid overdesigning the structure and, at later stages, to protect the hardware from overtesting. Of course the design loads have to include sufficient margins with respect to all possible source of uncertainties and the test loads have to be sufficiently high to demonstrate the mechanical qualification.

In order to meet the above mentioned objectives, especially for the PLM and instruments, the following key aspects are in place during the implementation phase of the spacecraft:

- careful selection of the "project factors" and "model factors" (ECSS-E-ST-32-10C), which should guarantee sufficient design margins without excessive conservatism
- "pre-agreed" force limited vibration approaches for notching (which consists of limiting the reaction force at the interface between the test article and the shaker (ECSS-E-HB-32-26A)) also during the phase of design loads and mechanical environments definition.

In general, the force limited vibration approach has a number of advantages (ECSS-E-HB-32-26A). In particular, with respect to the random vibration environments of the instruments, the "semi-empirical method" is used (Scharton 1997).

8. Conclusions

Euclid is an astronomy and astrophysics space mission of the European Space Agency having the objective to elucidate the geometry and the nature of dark energy and dark matter. This paper provided both an overview of the spacecraft mechanical architecture and a synthesis of the process applied to establish adequate mechanical loads for design and testing.

The Euclid spacecraft is composed by two modules: the Payload Module, which includes the telescope and the baseplate supporting the VIS and NISP instruments and the Service Module, which includes the sunshield.

The SVM mechanical architecture is inherited from the Herschel satellite design, with a primary structure formed by the central thrust cone and eight shear panels. This structure brings

the PLM loads directly to the launcher interface.

The PLM mechanical and thermal architectures aim at allowing independent development of the telescope and of the NISP and VIS instruments. It is organised around the silicon carbide baseplate which supports on one side the telescope primary and secondary mirrors, and on the other side the remaining optical elements and the two scientific instruments.

The second part of the paper presented a synthesis of the process applied to establish adequate mechanical loads for design and testing. For Euclid the rather traditional approach of "flowing-down" the loads and environments from the ones specified by the launcher user's manual to "lower level of assembly", e.g., payload module, instruments and units, has been applied. The fundamental aspects of the approach are the preparation of adequate mathematical models of the spacecraft, the execution of dynamic analyses at "spacecraft system" level applying as input the mechanical environments induced by the launcher and the recovery of the relevant responses. Frequency response analysis, vibro-acoustic analysis and shock analysis have been the main analyses performed at system level.

The Euclid project applies and makes reference to the ECSS documentation, in particular for what concerns the logic for factors of safety. Two key factors, the so called "project" and "model" factors ensure that the sizing of the structure is performed for higher loads than the qualification loads by covering the relevant uncertainties. The two factors act as a risk mitigation in the mechanical development process. However great attention has to be paid in defining the values of the factors since, if a too conservative approach is applied, they can produce an inefficient structural design with unnecessary mass penalty or even an unfeasible design.

Furthermore, in order to properly define the design loads to avoid overdesigning the structure and, at later stages, to protect the hardware from overtesting, a "notching strategy" has been established and agreed by ESA and industrial partners with the aim to produce a compliant, "optimised" design. This strategy is particularly important considering that the scientific instruments, as well as the PLM, are mainly made of silicon carbide, material with relatively high strength, but with high brittleness.

Acknowledgments

The authors are grateful to all Industry and ESA colleagues who are involved in the Euclid mechanical system design and development. Among them the authors like to mention the TASI colleagues Ms. M. Bellini, Mr. S. Destefanis, Mr. L. Tizzani and the ESA colleague Ms. D. Jollet.

References

Bellini, M. and Calvi, A. (2014), "Dynamic analysis and loads definition for the structural design of the Euclid spacecraft", *ISMA 2014 - USD 2014 Conference*, Leuven, Belgium, September.

ESA Mechanical shock design and verification handbook (2012), ESSB-HB-E-005, Noordwijk, The Netherlands, April.

Racca, G.D. *et al.* (2014), *The Euclid Spacecraft Design*, IAC-14-A7.1.3., *65th Int. Astronautical Congress (IAC 2014)*, Toronto, Canada.

Salvignol, J.C., Laine, B., Ngan, I., Honnen, K. and Kommer, A. (2009), "Notching during random vibration test based on interface forces", *The JWST NIRSpec Experience, 11th ECSSMMT, European Conference on Spacecraft Structures, Materials & Mechanical Testing*, Toulouse, France, September.

Scharton, T.D. (1997), *Force Limited Vibration Testing Monograph*, NASA Reference Publication RP-1403, May.
Soyuz User's Manual (2012), Issue 2 Rev. 0, March.
Spacecraft Mechanical Loads Analysis Handbook (2013), ECSS-E-HB-32-26A, Noordwijk, The Netherlands, February.
Structural factors of safety for spaceflight hardware (2009), ECSS-E-ST-32-10C Rev. 1, Noordwijk, The Netherlands, March.

EC